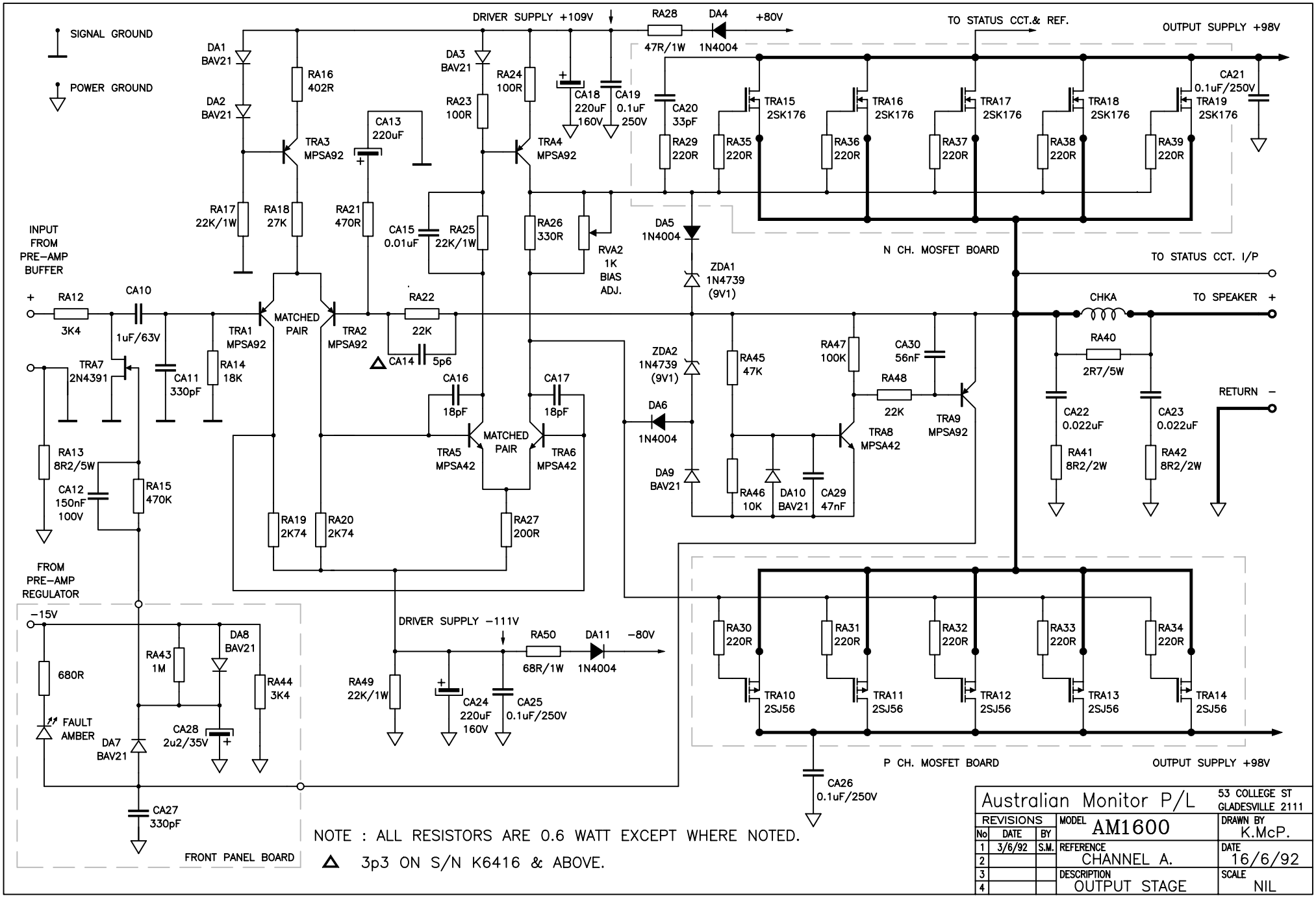
SIGNAL GROUND
POWER GROUND
DRIVER SUPPLY +109V
RA28
47R/1W
DA4
1N4004
+80V
TO STATUS CCT.& REF.
OUTPUT SUPPLY +98V
DA1 BAV21
DA2 BAV21
RA16 402R
TRA3 MPSA92
CA13 220uF
DA3 BAV21
RA23 100R
RA24 100R
TRA4 MPSA92
CA18 220uF 160V
CA19 0.1uF 250V
CA20 33pF
RA29 220R
TRA15 2SK176
TRA16 2SK176
TRA17 2SK176
TRA18 2SK176
TRA19 2SK176
CA21 0.1uF/250V
RA35 220R
RA36 220R
RA37 220R
RA38 220R
RA39 220R
RA17 22K/1W
RA18 27K
RA21 470R
CA15 0.01uF
RA25 22K/1W
RA26 330R
RVA2 1K BIAS ADJ.
DA5 1N4004
ZDA1 1N4739 (9V1)
N CH. MOSFET BOARD
TO STATUS CCT. I/P
INPUT FROM PRE-AMP BUFFER
RA12 3K4
CA10 1uF/63V
TRA1 MPSA92
MATCHED PAIR
TRA2 MPSA92
RA22 22K
CA14 5p6
CHKA
TO SPEAKER
TRA7 2N4391
CA11 330pF
RA14 18K
CA16 18pF
CA17 18pF
ZDA2 1N4739 (9V1)
RA45 47K
RA47 100K
CA30 56nF
RA48 22K
TRA9 MPSA92
RA40 2R7/5W
RETURN
DA6 1N4004
TRA5 MPSA42
MATCHED PAIR
TRA6 MPSA42
TRA8 MPSA42
CA22 0.022uF
CA23 0.022uF
RA13 8R2/5W
CA12 150nF 100V
RA15 470K
DA9 BAV21
RA46 10K
DA10 BAV21
CA29 47nF
RA41 8R2/2W
RA42 8R2/2W
RA19 2K74
RA20 2K74
RA27 200R
FROM PRE-AMP REGULATOR
-15V
DRIVER SUPPLY -111V
RA50 68R/1W
DA11 1N4004
-80V
RA30 220R
RA31 220R
RA32 220R
RA33 220R
RA34 220R
DA8 BAV21
RA43 1M
RA44 3K4
680R
RA49 22K/1W
CA24 220uF 160V
CA25 0.1uF/250V
FAULT AMBER
DA7 BAV21
CA28 2u2/35V
TRA10 2SJ56
TRA11 2SJ56
TRA12 2SJ56
TRA13 2SJ56
TRA14 2SJ56
P CH. MOSFET BOARD
OUTPUT SUPPLY +98V
CA26 0.1uF/250V
CA27 330pF
FRONT PANEL BOARD
NOTE : ALL RESISTORS ARE 0.6 WATT EXCEPT WHERE NOTED.
3p3 ON S/N K6416 & ABOVE.
Australian Monitor P/L
53 COLLEGE ST GLADESVILLE 2111
REVISIONS
No DATE BY
1 3/6/92 S.M.
2
3
4
MODEL AM1600
REFERENCE CHANNEL A.
DESCRIPTION OUTPUT STAGE
DRAWN BY K.McP.
DATE 16/6/92
SCALE NIL