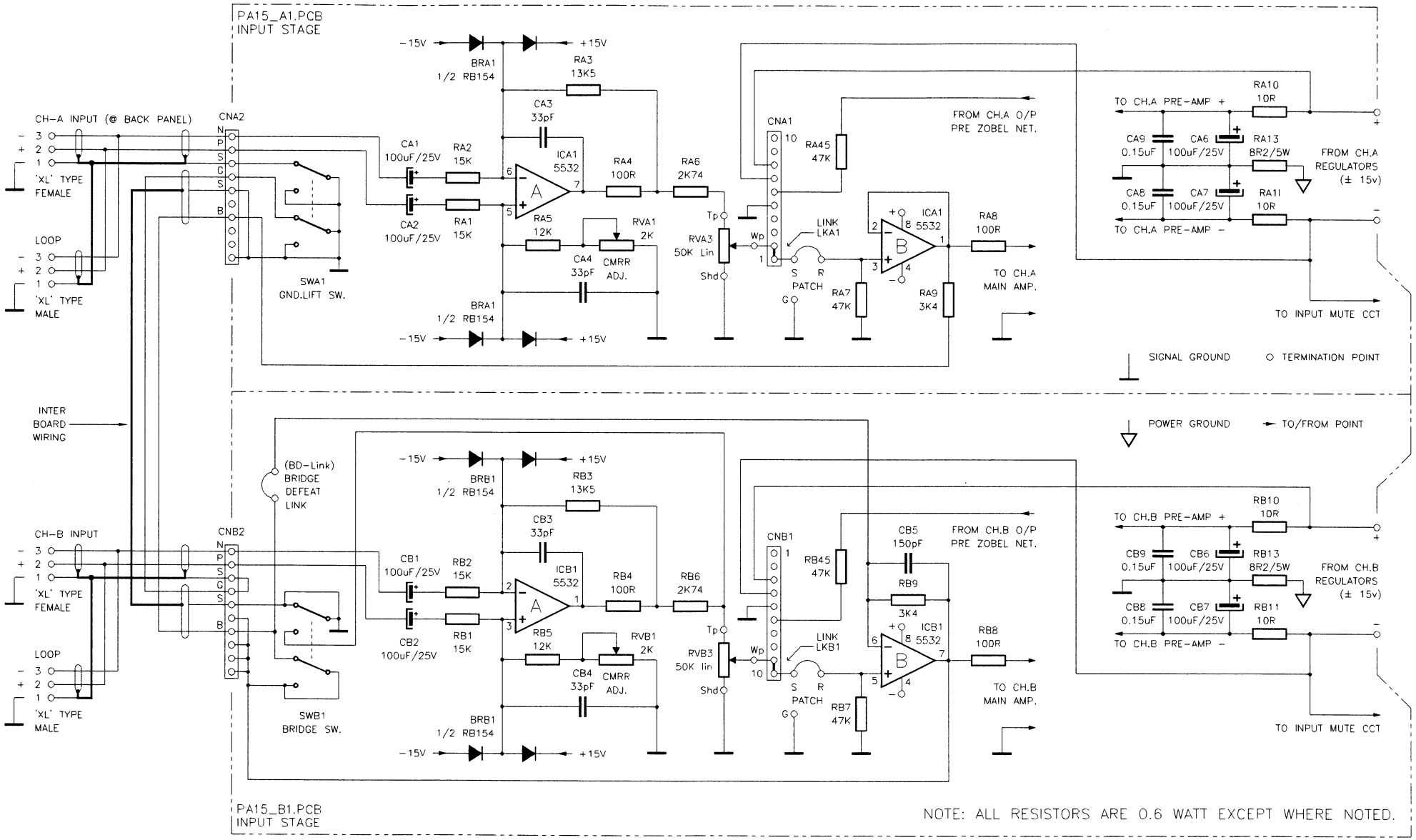

TES:

REV	ECO	REVISION NOTE	DRN	APP	DATE
A		ORIGINAL	SMcL		21/4/99
B					
C					
D					
E					
F					
G					

Australian Monitor

AUDIO TELEX COMMUNICATION P/L
149 BEACONSFIELD STREET
SILVERWATER NSW 2128
Phone: 61-(0)2-9647-1411
Fax: 61-(0)2-9748-2537

PRODUCT: PA1500
ASPECT: INPUT STAGE
SHOWING: CIRCUIT AND VALUES

DRAWING/CAD REFERENCE: **15_INS**
REV: **A**
DATE: 21-4-99
SHEET 1 OF 7

THIS DRAWING AND THE INFORMATION IT CONTAINS AND IMPLIES IS THE SOLE PROPERTY OF AUSTRALIAN MONITOR P/L AND CANNOT BE REPRODUCED IN ANY FORM WITHOUT PRIOR APPROVAL © 1999